BKV ...meer dan aanhaken!

Barneveldse KraanVerhuur bv

Weg-terrein kraan 50 ton

Nijkerkerweg 138
3771 LB Barneveld
telefoon 0342-492464
fax 0342-492912
e-mail info@bkv.nl;
www.bkv.nl

LIEBHERR 50 TON

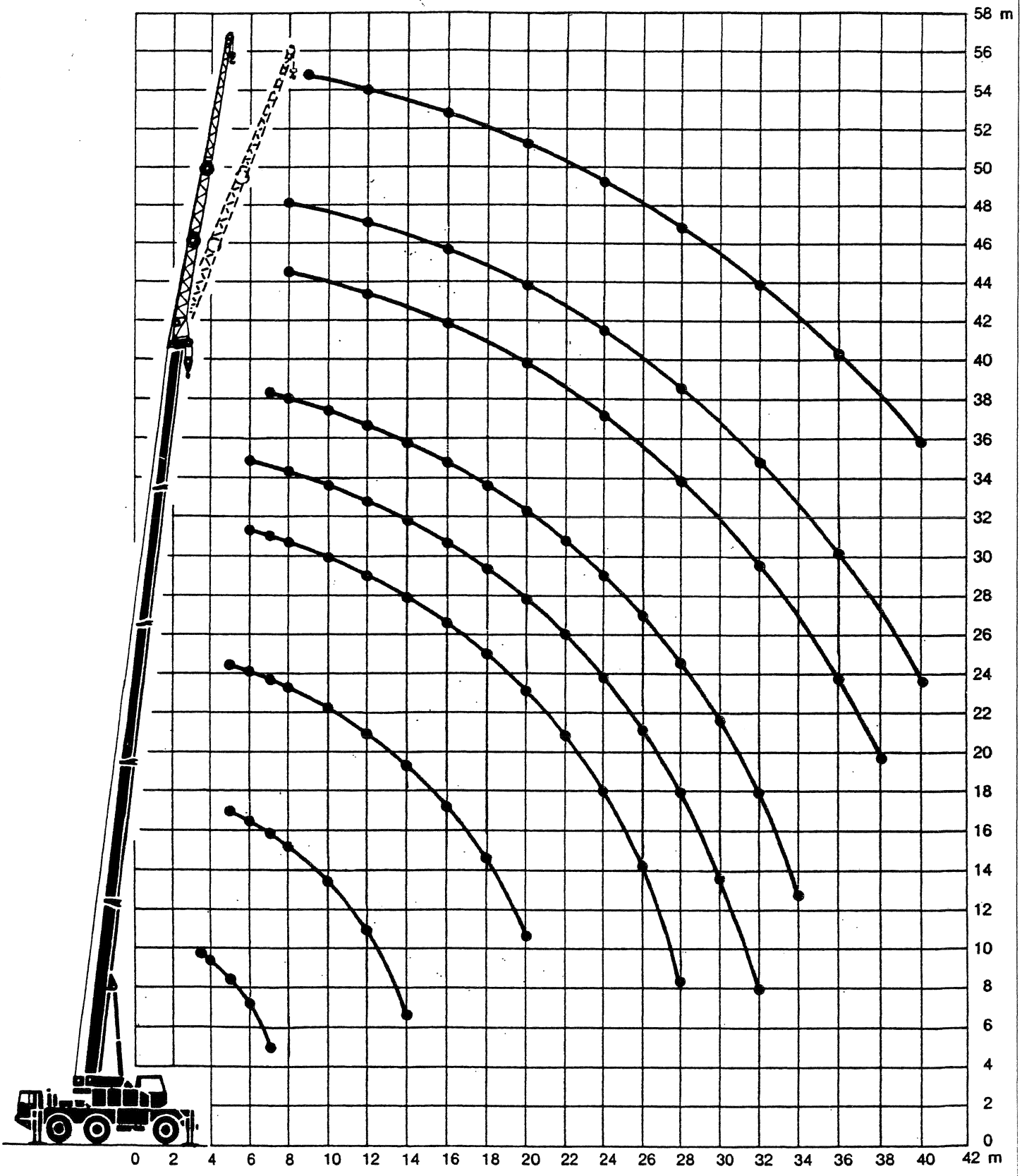

BKV ...meer dan aanhaken!

HIJSTABEL 50 TONS KRAAN

Kraan afgestempeld, Stempelbasis 8.05 x 7.2m
360° Werkbereik, 7.3 ton contragewicht

Vlucht Radius Meters	Gieklengten in meters							Hoofdgieklengte 35.2 m.			Hoofdgieklengte 38.0 m.		
								Klabjib 0°			Klabjib 0°		
	10.2	17.2	17.2	24.1	31.1	35.2	38.0	5.1	9.0	16.0	5.1	9.0	16.0
3.0	50	27.7	13.7	13.8	10.65	8.55	7.4						
3.5	45.5	27.7	14.7	14.8	10.65	8.55	7.4						
4.0	42.5	27.7	15.7	15.8	10.65	8.55	7.4						
4.5	38	27.7	16.7	16.8	10.65	8.55	7.4						
5.0	34	27.7	17.7	18.5	10.65	8.55	7.4						
6.0	28.3	24.7	19.7	18.1	10.65	8.55	7.4						
7.0	23.5	22.2	19.7	17.3	10.55	8.45	7.4						
8.0		17.7	19.5	16.3	10.45	8.35	7.3	6.30	5.00		5.10	4.0	
9.0		14.2	15.9	15.2	10.15	8.25	7.2	6.30	5.00	3.00	5.10	3.95	2.00
10.0		11.8	13.3	13.1	9.75	8.15	7.1	6.30	5.00	2.90	5.10	3.92	2.00
12.0		8.5	9.8	9.7	8.75	7.75	6.8	6.30	4.90	2.70	5.10	3.90	2.00
14.0		6.3	7.6	7.4	7.55	7.15	6.3	6.10	4.70	2.55	5.00	3.85	1.98
16.0				5.9	6.00	6.00	5.6	5.70	4.40	2.40	4.70	3.75	1.96
18.0				4.8	4.85	4.95	5.0	5.15	4.10	2.20	4.25	3.50	1.93
20.0				3.9	3.95	4.00	4.0	4.25	3.90	2.05	3.90	3.25	1.90
22.0					3.25	3.25	3.4	3.55	3.65	1.90	3.50	3.05	1.85
24.0					2.75	2.75	2.6	2.95	3.10	1.80	2.90	2.85	1.80
26.0					2.25	2.25	2.3	2.50	2.60	1.70	2.45	2.45	1.70
28.0					1.85	1.85	1.9	2.10	2.20	1.60	2.05	2.05	1.65
30.0						1.55	1.6	1.75	1.85	1.55	1.70	1.75	1.60
32.0						1.25	1.3	1.50	1.55	1.50	1.40	1.45	1.45
34.0							1.0	1.20	1.30	1.45	1.15	1.20	1.30
36.0								0.95	1.05	1.20	0.90	0.95	1.05
38.0									0.85	1.00	0.70	0.80	0.85
40.0									0.65	0.85		0.60	0.70

BKV ...meer dan aanhaken!
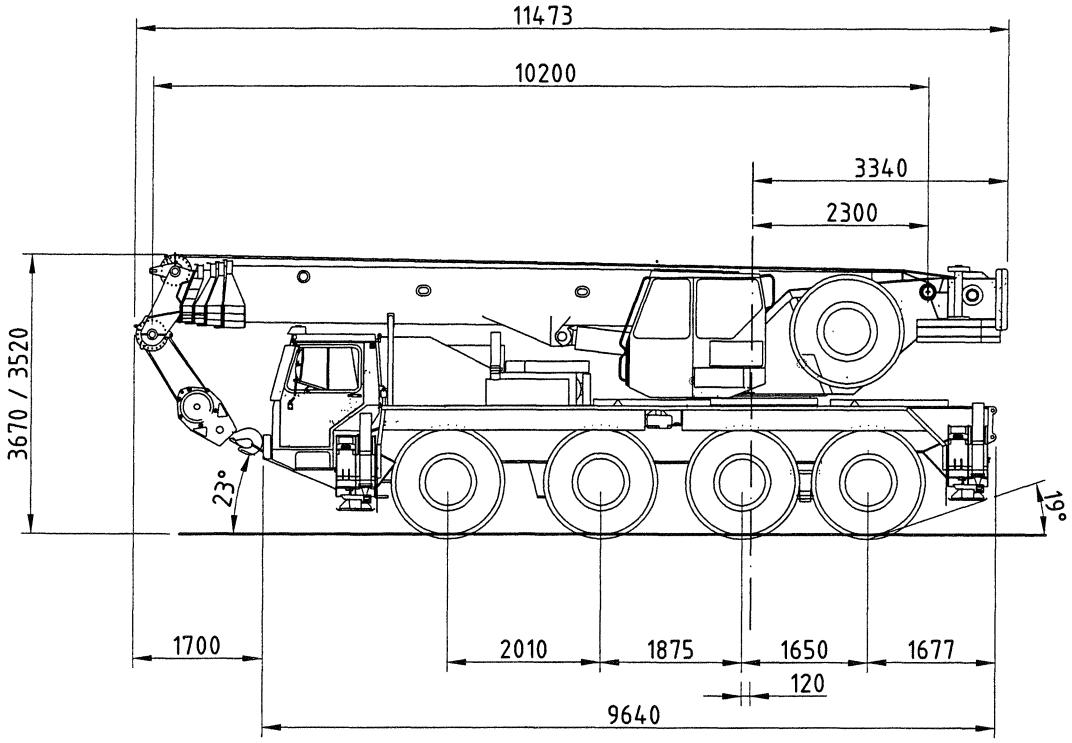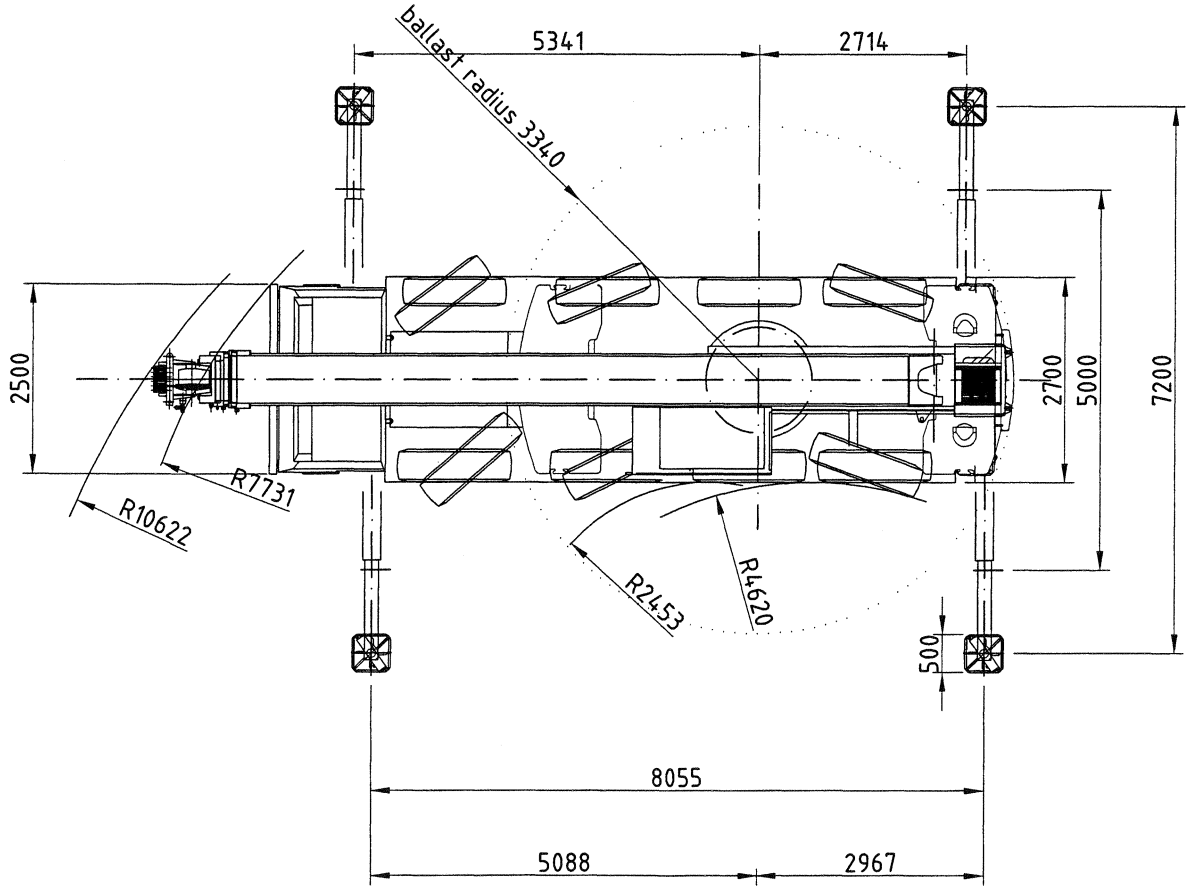
LIEBHERR 50 TON